ZYXEL

# GS1200-5HP v2 / GS1200-8HP v2

5-Port / 8-Port Web Managed
PoE Gigabit Switch

## Quick Start Guide

ENGLISH | DEUTSCH | FRANÇAIS | ITALIANO
ESPAÑOL | NEDERLANDS | DANSK | NORSK
SVENSKA | SUOMI

## Package Contents

- Switch
- Power Adapter
- Power Cord
- QSG
- Declaration of Conformity
  Safety Warning

## 1 Hardware Installation

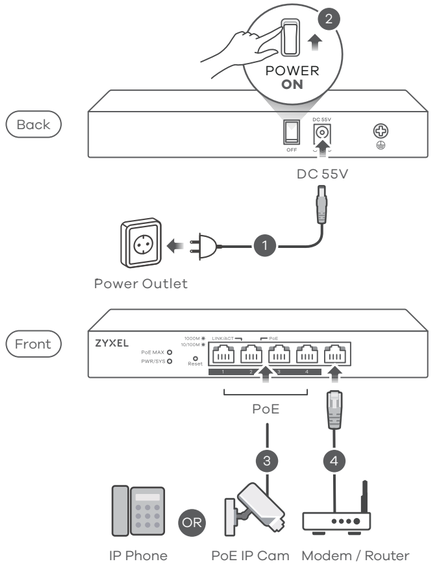


* Non-PoE devices can connect to the PoE ports, but PoE power is not supplied to them.

**EN**
1. Connect to an appropriate power source.
2. Set the power switch to the **ON** position.
3. Connect PoE ports 1 - 4 to PoE devices (such as IP Cam and IP phone).
4. Connect to a modem or router that has internet access.

**DE**
1. An eine geeignete Stromquelle anschließen.
2. Stellen Sie den Ein/Aus-Schalter in die Position **ON**.
3. Verbinden Sie PoE Ports 1 - 4 mit den PoE Geräten (z.B. IP Cam und IP Telefon).
4. An ein Modem oder einen Router mit Internetanschluss anschließen.

**FR**
1. Connectez-vous à une source d'alimentation appropriée.
2. Mettez l'interrupteur d'alimentation sur la position **ON** (Marche).
3. Connectez les ports PoE 1 - 4 aux appareils PoE (tels que Cam IP et téléphone IP).
4. Connectez-vous à un modem ou un routeur ayant accès à Internet.Connectez-vous à un modem ou un routeur ayant accès à Internet.

**IT**
1. Collegare ad una fonte di alimentazione appropriata.
2. Impostare l'interruttore di alimentazione nella posizione **ON**.
3. Collegare le porte PoE 1 - 4 ai dispositivi PoE (ad esempio IP Cam e telefono IP).
4. Connettersi a un modem o router con accesso Internet.

**ES**
1. Conecte a una fuente de corriente apropiada.
2. Coloque el interruptor de corriente en la posición de encendido.
3. Conecte los puertos PoE 1 - 4 a dispositivos PoE (como IP Cam o IP phone).
4. Conectar a un módem o router con acceso a Internet.

## 2 Manage Your Device

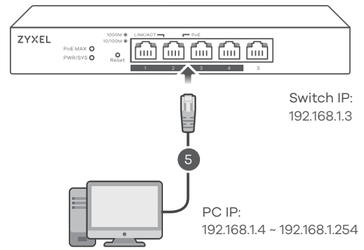


6

http://192.168.1.3 Password : 1234 (default)

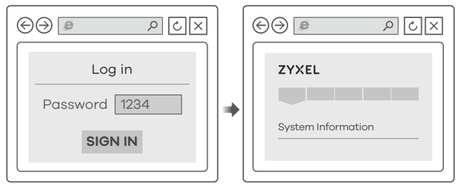


**EN**
5. Connect your computer to the Switch using an Ethernet cable. Your computer must have an IP address in the same subnet as the Switch.
6. Launch your web browser and go to http://192.168.1.3. Enter 1234 as the password. Click **SIGN IN**.

**DE**
5. Verwenden Sie ein Ethernet-Kabel, um den Computer mit dem Switch zu verbinden. Ihr Computer muss eine IP-Adresse im gleichen Subnetz wie der Switch selbst haben.
6. Starten Sie Ihre Web Browser und gehen Sie auf http://192.168.1.3. Geben Sie admin als den Anwendernamen und 1234 als das Passwort ein.
   Klicken Sie auf **SIGN IN**.

**FR**
5. Connectez votre ordinateur au commutateur à l'aide d'un câble Ethernet. Votre ordinateur doit disposer d'une adresse IP dans le même sous-réseau que le commutateur.
6. Lancez votre navigateur web et allez à http://192.168.1.3. Entrez admin comme nom d'utilisateur et 1234 comme mot de passe. Cliquez sur **SIGN IN**.

**IT**
5. Collegare il computer allo Switch utilizzando un cavo Ethernet. Il computer deve avere un indirizzo IP nella stessa sottorete dello switch.
6. Avviare il browser e inserire l'indirizzo http://192.168.1.3. Immettere admin come nome utente e 1234 come password. Fare clic su **SIGN IN**.

**ES**
5. Conecte su ordenador al conmutador usando un cable Ethernet. Su ordenador debe tener una dirección IP en la misma subred que el conmutador.
6. Abra el navegador web y vaya a http://192.168.1.3. Escriba el nombre de usuario admin y la contraseña 1234. Haga clic en **SIGN IN**.

## LEDs

| | | |
|---|---|---|
| PWR/SYS | Green | **On** - Power on<br>**Blinking** - Starting up |
| LINK/ACT | Amber | **On** - 10/100 Mbps connection ready<br>**Blinking** - Data transmitting |
| | Green | **On** - 1000 Mbps connection ready<br>**Blinking** - Data transmitting |
| PoE | Green | **On** - PoE enabled<br>**Off** - PoE disabled or not supplied |
| PoE MAX | Amber | **On** - More than 50W supplied and approaching maximum<br>**Off** - Less than 50W supplied |

## Troubleshooting

**I cannot see or access the Login screen in the Web Configurator.**
- Make sure you are using the correct IP address.
  (The default IP address is 192.168.1.3.)
- Make sure your computer is in the same subnet as the Switch. If you haven't changed the default IP address, your computer IP address should be in the 192.168.1.4 ~ 168.1.254 range.
- Make sure you have entered the **Password** correctly. If you have changed the **Password** and have forgotten it, you'll have to reset the Switch to its factory default.
  (The default **Password** is 1234.)

**The PoE LED is off/PoE power is not supplied.**
- Make sure the Ethernet cable is securely connected to the Switch, and you're using the correct type of Ethernet cable (Category 5e, 6UTP/STP, or better Ethernet cable).
- Go to **System** in the Web Configurator to check the amount of PoE power available. The maximum PoE power is 60W, and the maximum per port is 30W. If the total power required by the PoE-enabled devices exceeds the maximum PoE power, the last PoE-enabled device connected to the Switch won't be powered up (PoE power is allocated in the order the PoE-enabled devices were connected).

**A loop is detected.**
- A loop may happen in the following example situations:
  1. The Switch is connected to another device in a loop state.
  2. The Switch is connected to another device with two cables.
- **Loop Prevention** is enabled by default. If a loop happens, the Switch will block the port in a loop state. If a loop happens on two ports, the Switch will block the higher-numbered port. For example, if a loop happens on ports 4 and 5, the Switch will block port 5, and its LED will be off. To restore a port in a loop state, disconnect it, check the network connections, and reconnect it.
- You can log into the Web Configurator. Go to **System** in the Web Configurator to check your port status.

ZYXEL
Your Networking Ally

# Warranty Card

Thank you for purchasing a Zyxel product. Zyxel has a reputation for delivering high quality, high performance products and services to our customers.
We recommend that you now visit the Zyxel website and register your product online. This will mean you can receive the latest firmware, drivers and product related information. If you still have further questions or enquiries related to the product, please contact our subsidiaries worldwide. Please note that warranty terms may vary by region. Full detailed information is available on our website, here: http://www.zyxel.com/support/warranty_information.shtml

## Purchase Information

Zyxel Product Name:

Hardware Serial Number:

Date of Purchase:

(In certain countries, the warranty will be validated with seller's signature and stamp):

## Support Information

**North America**
**USA**
+ 1 800 255 4101
support@zyxel.com

**France**
+ 33 (0)4 72 52 97 97
support@zyxel.fr

**UK**
+ 44 (0) 118 9121 700
support@zyxel.co.uk

**Italy**
+ 39 011 2308000
support@zyxel.it

**Germany**
+ 49 (0) 2405 6909 0
support@zyxel.de

**Spain**
+ 911 792 100
soporte@zyxel.es

**See the User's Guide at www.zyxel.com for more information, including customer support and safety warnings.**

**EU Importer**
Zyxel Communications A/S
Generatorvej 8D, 2860 Søborg, Denmark.
http://www.zyxel.dk

**US Importer**
Zyxel Communications, Inc
1130 North Miller Street Anaheim, CA 92806-2001
http://www.us.zyxel.com

Copyright © 2017 Zyxel Communications Corp. All Rights Reserved.

ZYXEL

# GS1200-5HP v2 / GS1200-8HP v2

5-Port / 8-Port Web Managed
PoE Gigabit Switch

## Quick Start Guide

ENGLISH | DEUTSCH | FRANÇAIS | ITALIANO
ESPAÑOL | NEDERLANDS | DANSK | NORSK
SVENSKA | SUOMI

## Package Contents

- Switch
- Power Adapter
- Power Cord
- QSG
- Declaration of Conformity
  Safety Warning

## 1 Hardware Installation

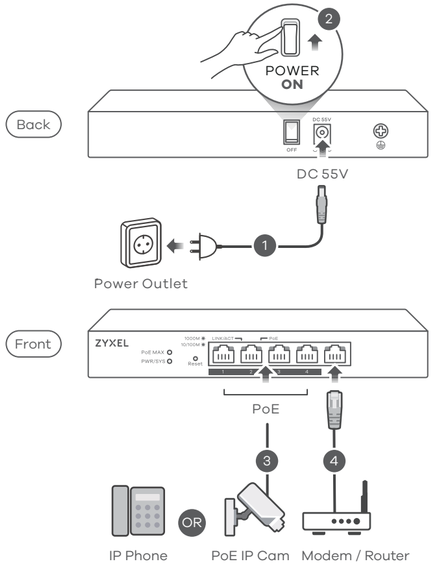


* Non-PoE devices can connect to the PoE ports, but PoE power is not supplied to them.

**NL**
1. Sluit aan op een geschikte stroombron.
2. Zet de schakelaar op '**ON** (AAN)'.
3. Sluit PoE poorten 1 - 4 aan op PoE apparaten (zoals IP Cam en IP phone).
4. Sluit aan op een modem of router met internetverbinding.

**DK**
1. Tilslut til en relevant strømkilde.
2. Sæt strømkontakten til **ON**-positionen.
3. Tilslut PoE-port 1 - 4 til PoE-enheder (så som IP-kamera og IP-telefon).
4. Tilslut til et modem eller router der har internetadgang.

**NO**
1. Koble til en hensiktsmessig strømkilde.
2. Sett strømbryteren i påslått posisjon.
3. Koble PoE-port 1 til 4 til PoE-enheter (for eksempel IP Cam og IP-telefon).
4. Koble til et modem eller en ruter som har Internett-tilgang.

**SE**
1. Anslut till en lämplig strömkälla.
2. Konfigurera strömbrytaren till påslagen position.
3. Anslut PoE-portar 1 - 4 till PoE-enheter (såsom IP Cam och IP-telefoni).
4. Anslut till ett modem eller en router som har internetåtkomst.

**FI**
1. Liitä laite yhteensopivaan virtalähteeseen.
2. Aseta virtakytkin **ON**-asentoon.
3. Liitä PoE-portit 1–4 PoE-laitteisiin, kuten IP-kameraan tai IP-puhelimeen.
4. Liitä laite modeemiin tai reitittimeen, josta on Internet-yhteys.

## 2 Manage Your Device

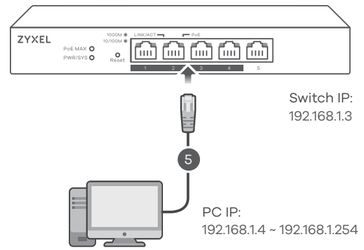


6

http://192.168.1.3 Password : 1234 (default)

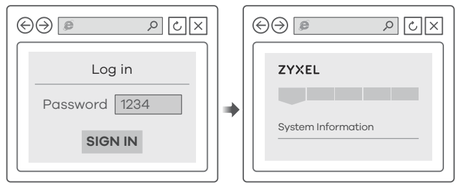


**NL**
5. Sluit uw computer aan op de Schakelaar met een Ethernet-kabel. Uw computer dient een IP-adres te hebben in hetzelfde subnet als de Schakelaar.
6. Open uw webbrowser en ga naar http://192.168.1.3. Voer 1234 in als wachtwoord. Klik op **AANMELDEN**.

**DK**
5. Tilslut din computer til switchen ved brug af et Ethernet-kabel. Din computer skal have en IP-adresse i det samme undernet som switchen.
6. Start din webbrowser og gå til http://192.168.1.3. Indtast 1234 som adgangskode. Klik på **SIGN IN (Log på)**.

**NO**
5. Koble datamaskinen til bryteren ved hjelp av en Ethernet-kabel. Datamaskinen må ha en IP-adresse i samme subnett som bryteren.
6. Åpne nettleseren og gå til http://192.168.1.3. Angi 1234 som passord. Klikk på **LOGG PÅ**.

**SE**
5. Anslut datorn till switchen med en Ethernet-kabel. Datorn måste ha en IP-adress i samma subnät som switchen.
6. Starta din webbläsare och gå till sidan http://192.168.1.3. Skriv in 1234 som lösenord. Klicka på **LOGGA IN**.

**FI**
5. Liitä tietokone kytkimeen Ethernet-kaapelilla. Tietokoneen IP-osoitteen on oltava samassa aliverkossa kytkimen IP-osoitteen kanssa.
6. Avaa selain ja siirry osoitteeseen https://192.168.1.3. Kirjoita salasanaksi 1234. Valitse **SIGN IN (KIRJAUDU)**.

## LEDs

| | | |
|---|---|---|
| PWR/SYS | Green | ● **On** - Power on<br>☀ **Blinking** - Starting up |
| LINK/ACT | Amber | ▬ **On** - 10/100 Mbps connection ready<br>**Blinking** - Data transmitting |
| | Green | ▬ **On** - 1000 Mbps connection ready<br>**Blinking** - Data transmitting |
| PoE | Green | ▬ **On** - PoE enabled<br>▬ **Off** - PoE disabled or not supplied |
| PoE MAX | Amber | ● **On** - More than 50W supplied and approaching maximum<br>● **Off** - Less than 50W supplied |

## Troubleshooting

**I cannot see or access the Login screen in the Web Configurator.**

- Make sure you are using the correct IP address.
  (The default IP address is 192.168.1.3.)
- Make sure your computer is in the same subnet as the Switch. If you haven't changed the default IP address, your computer IP address should be in the 192.168.1.4 ~ 168.1.254 range.
- Make sure you have entered the **Password** correctly. If you have changed the **Password** and have forgotten it, you'll have to reset the Switch to its factory default.
  (The default **Password** is 1234.)

**The PoE LED is off/PoE power is not supplied.**

- Make sure the Ethernet cable is securely connected to the Switch, and you're using the correct type of Ethernet cable (Category 5e, 6UTP/STP, or better Ethernet cable).
- Go to **System** in the Web Configurator to check the amount of PoE power available. The maximum PoE power is 60W, and the maximum per port is 30W. If the total power required by the PoE-enabled devices exceeds the maximum PoE power, the last PoE-enabled device connected to the Switch won't be powered up (PoE power is allocated in the order the PoE-enabled devices were connected).

**A loop is detected.**

- A loop may happen in the following example situations:
  1. The Switch is connected to another device in a loop state.
  2. The Switch is connected to another device with two cables.
- **Loop Prevention** is enabled by default. If a loop happens, the Switch will block the port in a loop state. If a loop happens on two ports, the Switch will block the higher-numbered port. For example, if a loop happens on ports 4 and 5, the Switch will block port 5, and its LED will be off. To restore a port in a loop state, disconnect it, check the network connections, and reconnect it.
- You can log into the Web Configurator. Go to **System** in the Web Configurator to check your port status.

ZYXEL
Your Networking Ally

# Warranty Card

Thank you for purchasing a Zyxel product. Zyxel has a reputation for delivering high quality, high performance products and services to our customers.
We recommend that you now visit the Zyxel website and register your product online. This will mean you can receive the latest firmware, drivers and product related information. If you still have further questions or enquiries related to the product, please contact our subsidiaries worldwide. Please note that warranty terms may vary by region. Full detailed information is available on our website, here: http://www.zyxel.com/support/warranty_information.shtml

## Purchase Information

Zyxel Product Name:

Hardware Serial Number:

Date of Purchase:

(In certain countries, the warranty will be validated with seller's signature and stamp):

## Support Information

**Netherlands**
+31 (0)88-00029112
support@zyxel.nl

**Finland**
+ 358 9 4780 8400
teknisk@zyxel.fi

**Denmark**
+ 45 30 55 07 00
support@zyxel.dk

**Norway**
+ 47 22 80 61 80
teknisk@zyxel.no

**Sweden**
+ 46 8 557 760 60
support@zyxel.se

**See the User's Guide at www.zyxel.com for more information, including customer support and safety warnings.**

**EU Importer**
Zyxel Communications A/S
Generatorvej 8D, 2860 Søborg, Denmark.
http://www.zyxel.dk

**US Importer**
Zyxel Communications, Inc
1130 North Miller Street Anaheim, CA 92806-2001
http://www.us.zyxel.com

Copyright © 2017 Zyxel Communications Corp. All Rights Reserved.

ZYXEL

# GS1200-5HP v2 / GS1200-8HP v2

5-Port / 8-Port Web Managed
PoE Gigabit Switch

## Quick Start Guide

ČEŠTINA | SLOVENČINA | POLSKI | ROMÂNĂ
MAGYAR | SLOVENŠČINA | БЪЛГАРСКИ | TÜRK
ภาษาไทย | 繁體中文

## 1 Hardware Installation

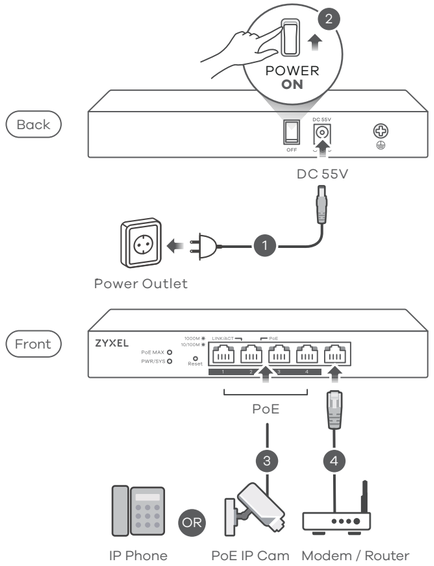


* Non-PoE devices can connect to the PoE ports, but PoE power is not supplied to them.

## 2 Manage Your Device

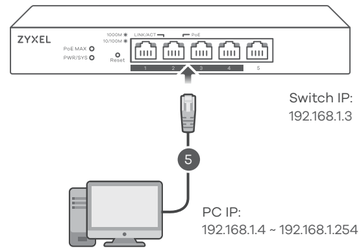


6

http://192.168.1.3 Password : 1234 (default)

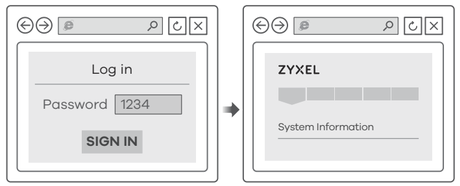


## LEDs

| | | |
|---|---|---|
| PWR/SYS | Green | ● **On** - Power on<br>☀ **Blinking** - Starting up |
| LINK/ACT | Amber | ▬ **On** - 10/100 Mbps connection ready<br>**Blinking** - Data transmitting |
| | Green | ▬ **On** - 1000 Mbps connection ready<br>**Blinking** - Data transmitting |
| PoE | Green | ▬ **On** - PoE enabled<br>▬ **Off** - PoE disabled or not supplied |
| PoE MAX | Amber | ● **On** - More than 50W supplied and approaching maximum<br>● **Off** - Less than 50W supplied |

ZYXEL
Your Networking Ally

# Warranty Card

Thank you for purchasing a Zyxel product. Zyxel has a reputation for delivering high quality, high performance products and services to our customers.
We recommend that you now visit the Zyxel website and register your product online. This will mean you can receive the latest firmware, drivers and product related information. If you still have further questions or enquiries related to the product, please contact our subsidiaries worldwide. Please note that warranty terms may vary by region. Full detailed information is available on our website, here: http://www.zyxel.com/support/warranty_information.shtml

## Purchase Information

Zyxel Product Name:

Hardware Serial Number:

Date of Purchase:

(In certain countries, the warranty will be validated with seller's signature and stamp):

## Package Contents

- Switch
- Power Adapter
- Power Cord
- QSG
- Declaration of Conformity
  Safety Warning

**CZ**
1. Připojte do odpovídajícího zdroje energie.
2. Zapněte síťový vypínač.
3. Připojte porty PoE 1 až 4 do zařízení PoE (například IP Cam a IP teleton).
4. Zapojte do modemu nebo směrovače s přístupem k internetu.

**SK**
1. Pripojte k vhodnému zdroju napájania.
2. Hlavný vypínač prepnite do polohy zapnutia.
3. Porty PoE 1 až 4 prepojte so zariadeniami PoE (ako je IP kamera a IP telefón).
4. Pripojte k modemu alebo smerovaču s prístupom do internetu.

**PL**
1. Podłącz do odpowiedniego źródła zasilania.
2. Ustaw wyłącznik w położeniu włączenia.
3. Połącz porty PoE 1–4 z urządzeniami PoE (takimi jak kamera internetowa czy telefon internetowy).
4. Podłącz do modemu lub routera z dostępem do Internetu.

**RO**
1. Conectați la o sursă de alimentare corespunzătoare.
2. Setați întrerupătorul general în poziția on (pornit).
3. Conectați porturile PoE de la 1 la 4 la dispozitivele PoE (cum ar fi Cam IP și telefonul IP).
4. Conectați la un modem sau router care este prevăzut cu acces la internet.

**HU**
1. Csatlakoztasson egy megfelelő áramforrást.
2. A készülék főkapcsolóját állítsa bekapcsolt állapotba.
3. Csatlakoztassa az 1. – 4. PoE portokat PoE készülékekhez (pl. IP kamerához vagy IP telefonhoz).
4. Csatlakoztasson egy internetkapcsolattal rendelkező modemet vagy útválasztót.

**CZ**
5. Kabelem sítě Ethernet připojte počítač nebo notebook k přepínači. Počítač musí mít stejnou IP adresu ve stejné podsíti jako přepínač.
6. Spusťte webový prohlížeč a přejděte na http://192.168.1.3. Jako heslo zadejte 1234. Klikněte na možnost **SIGN IN (Přihlásit se)**.

**SK**
5. Pomocou kábla siete Ethernet pripojte svoj počítač k zariadeniu Switch. Adresa IP vášho počítača musí byť v rámci rovnakej podsiete ako je zariadenie Switch.
6. Otwórz przeglądarkę internetową i wpisz adres http://192.168.1.3. Podaj hasło 1234. Kliknij **SIGN IN (zaloguj się)**.

**PL**
5. Podłącz komputer lub notebook do przełącznika, korzystając z kabla sieciowego. Komputer musi mieć adres IP w tej samej podsieci, co przełącznik.
6. Lansați navigatorul dvs. web și accesați http://192.168.1.3. Introduceți 1234 ca parolă. Dați clic pe **SIGN IN (AUTENTIFICARE)**.

**RO**
5. Conectați-vă computerul la Comutator cu ajutorul unui cablu Ethernet. Computerul dvs. trebuie să aibă o adresă IP în aceeași subrețea ca și Comutatorul.
6. Indítsa el a webböngészőt és írja be a http://192.168.1.3 címet. Adja meg az 1234 jelszót. Kattintson a **SIGN IN (bejelentkezés)** gombra.

**HU**
5. Csatlakoztassa számítógépét a switch-hez egy Ethernet kábellel. Számítógépének a switch alhálózatához tartozó IP címmel kell rendelkeznie.
6. Spusťte webový prohlížeč a přejděte na http://192.168.1.3. Jako heslo zadejte 1234. Klikněte na možnost **SIGN IN (Přihlásit se)**.

## Troubleshooting

**I cannot see or access the Login screen in the Web Configurator.**
- Make sure you are using the correct IP address. (The default IP address is 192.168.1.3.)
- Make sure your computer is in the same subnet as the Switch. If you haven't changed the default IP address, your computer IP address should be in the 192.168.1.4 ~ 168.1.254 range.
- Make sure you have entered the **Password** correctly. If you have changed the **Password** and have forgotten it, you'll have to reset the Switch to its factory default. (The default **Password** is 1234.)

**The PoE LED is off/PoE power is not supplied.**
- Make sure the Ethernet cable is securely connected to the Switch, and you're using the correct type of Ethernet cable (Category 5e, 6UTP/STP, or better Ethernet cable).
- Go to **System** in the Web Configurator to check the amount of PoE power available. The maximum PoE power is 60W, and the maximum per port is 30W. If the total power required by the PoE-enabled devices exceeds the maximum PoE power, the last PoE-enabled device connected to the Switch won't be powered up (PoE power is allocated in the order the PoE-enabled devices were connected).

**A loop is detected.**
- A loop may happen in the following example situations:
  1. The Switch is connected to another device in a loop state.
  2. The Switch is connected to another device with two cables.
- **Loop Prevention** is enabled by default. If a loop happens, the Switch will block the port in a loop state. If a loop happens on two ports, the Switch will block the higher-numbered port. For example, if a loop happens on ports 4 and 5, the Switch will block port 5, and its LED will be off. To restore a port in a loop state, disconnect it, check the network connections, and reconnect it.
- You can log into the Web Configurator. Go to **System** in the Web Configurator to check your port status.

## Support Information


**Czech**
+ 420 241 774 665
support@cz.zyxel.com

**Hungary**
+ 36 1 848 0690
support@zyxel.hu

**Slovakia**
+ 421 220 861 848
soporte@sk.zyxel.com

**Poland**
+ 48 22 652 16 26
support@pl.zyxel.com

**Romania**
info@ro.zyxel.com


**See the User's Guide at www.zyxel.com for more information, including customer support and safety warnings.**


**EU Importer**
Zyxel Communications A/S
Generatorvej 8D, 2860 Søborg, Denmark.
http://www.zyxel.dk

**US Importer**
Zyxel Communications, Inc
1130 North Miller Street Anaheim, CA 92806-2001
http://www.us.zyxel.com


Copyright © 2017 Zyxel Communications Corp. All Rights Reserved.

ZYXEL

# GS1200-5HP v2 / GS1200-8HP v2

5-Port / 8-Port Web Managed
PoE Gigabit Switch

## Quick Start Guide

ČEŠTINA | SLOVENČINA | POLSKI | ROMÂNĂ
MAGYAR | SLOVENŠČINA | БЪЛГАРСКИ | TÜRK
ภาษาไทย | 繁體中文

## Package Contents

Switch

Power Adapter

Power Cord

QSG

Declaration of Conformity
Safety Warning

## 1 Hardware Installation

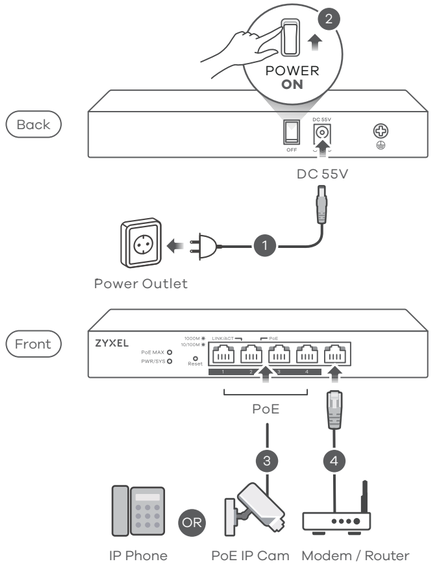


* Non-PoE devices can connect to the PoE ports, but PoE power is not supplied to them.

**SL**
1. Priključite v ustrezno električno vtičnico.
2. Preklopite stikalo vkl./izk. na vklop ("ON").
3. Povežite vrata 1–4 PoE na naprave PoE (kot sta IP Cam in telefon IP).
4. Povežite na modem ali usmerjevalnik, ki ima internetni dostop.

**BG**
1. Свържете към подходящо захранване.
2. Натиснете превключвателя за захранване в положение вкл.
3. Свържете PoE портове 1 - 4 към PoE устройства (като IP КАМЕРА и IP телефон).
4. Свържете към модел или рутер, който има интернет достъп.

**TR**
1. Uygun bir güç kaynağına bağlayın.
2. Güç anahtarını **ON (AÇIK)** konumuna ayarlayın.
3. PoE 1 - 4 bağlantı noktalarına PoE aygıtları (IP kamera ve IP telefon gibi) bağlayın.
4. Internet erişimi olan bir modeme veya yönlendiriciye bağlayın.

**TH**
1. เชื่อมต่อไปยังแหล่งจ่ายไฟที่เหมาะสม
2. เปิดปุ่มพาวเวอร์ไปที่ตำแหน่งเปิด
3. เชื่อมต่อพอร์ต PoE 1-4 ไปที่อุปกรณ์ PoE (เช่น กล้อง IP Cam และโทรศัพท์ IP)
4. เชื่อมต่อกับโมเด็มหรือเราเตอร์ที่มีการเข้าถึงอินเทอร์เนต์

**TW**
1. 連接至適當的電源插座。
2. 按下電源鍵以開啟交換器。
3. 將 PoE 埠 1-4 接上 PoE 受電設備(例如：網路攝影機和網路電話)。
4. 連接至可存取網際網路的數據機或路由器。

## 2 Manage Your Device

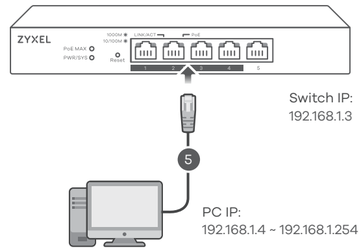


6

http://192.168.1.3 Password : 1234 (default)

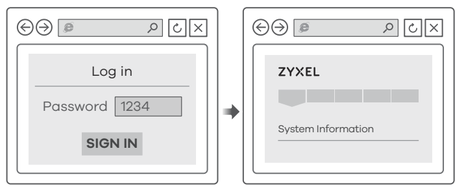


**SL**
5. Z eternetnim kablom povežite računalnik na Switch. Računalnik mora imeti naslov IP v istem podmrežju, kot ga ima Switch.
6. Zaženite spletni brskalnik in odprite http://192.168.1.3. Vnesite geslo 1234. Kliknite **PRIJAVI**.

**BG**
5. Свържете Вашия компютър към суича с помощта на Ethernet кабел. Вашият компютър трябва да има IP адрес в същата подмаска като суича.
6. Отворете браузъра и отидете на https://192.168.1.3. Въведете 1234 като парола. Щракнете **ВХОД**.

**TR**
5. Bilgisayarınızı bir Ethernet kablosu kullanarak Anahtara bağlayın. Bilgisayarınız, Anahtarla aynı alt ağdaki bir IP adresine sahip olmalıdır.
6. Web tarayıcınızı başlatıp http://192.168.1.3 adresine gidin. Şifre olarak 1234 girin. **SIGN IN (OTURUM AÇ)** düğmesine tıklayın.

**TH**
5. เชื่อมต่อคอมพิวเตอร์กับสวิทช์โดยใช้สายเคเบิลอีเธอร์เน็ต คอมพิวเตอร์ของคุณต้องมีที่อยู่ IP ในเครือข่ายย่อยเช่นเดียวกับสวิทช
6. เปิดเว็บเบราว์เซอร์ของคุณและไปที่ http://192.168.1.3 ป้อนรหัสผ่าน 1234 คลิก **SIGN IN (ลงชื่อเข้าใช้งาน)**

**TW**
5. 用乙太網路線將電腦連接至交換器。您電腦的 IP 位址必須與交換器位在同一個子網域。
6. 啟動您的網頁瀏覽器，並前往 http://192.168.1.3。輸入密碼 1234 並登入。

## LEDs

| | | |
|---|---|---|
| PWR/SYS | Green | ● **On** - Power on<br>☀ **Blinking** - Starting up |
| LINK/ACT | Amber | ▬ **On** - 10/100 Mbps connection ready<br>☀ **Blinking** - Data transmitting |
| | Green | ▬ **On** - 1000 Mbps connection ready<br>☀ **Blinking** - Data transmitting |
| PoE | Green | ▬ **On** - PoE enabled<br>▬ **Off** - PoE disabled or not supplied |
| PoE MAX | Amber | ● **On** - More than 50W supplied and approaching maximum<br>● **Off** - Less than 50W supplied |

## Troubleshooting

**I cannot see or access the Login screen in the Web Configurator.**
- Make sure you are using the correct IP address. (The default IP address is 192.168.1.3.)
- Make sure your computer is in the same subnet as the Switch. If you haven't changed the default IP address, your computer IP address should be in the 192.168.1.4 ~ 168.1.254 range.
- Make sure you have entered the **Password** correctly. If you have changed the **Password** and have forgotten it, you'll have to reset the Switch to its factory default. (The default **Password** is 1234.)

**The PoE LED is off/PoE power is not supplied.**
- Make sure the Ethernet cable is securely connected to the Switch, and you're using the correct type of Ethernet cable (Category 5e, 6UTP/STP, or better Ethernet cable).
- Go to **System** in the Web Configurator to check the amount of PoE power available. The maximum PoE power is 60W, and the maximum per port is 30W. If the total power required by the PoE-enabled devices exceeds the maximum PoE power, the last PoE-enabled device connected to the Switch won't be powered up (PoE power is allocated in the order the PoE-enabled devices were connected).

**A loop is detected.**
- A loop may happen in the following example situations:
  1. The Switch is connected to another device in a loop state.
  2. The Switch is connected to another device with two cables.
- **Loop Prevention** is enabled by default. If a loop happens, the Switch will block the port in a loop state. If a loop happens on two ports, the Switch will block the higher-numbered port. For example, if a loop happens on ports 4 and 5, the Switch will block port 5, and its LED will be off. To restore a port in a loop state, disconnect it, check the network connections, and reconnect it.
- You can log into the Web Configurator. Go to **System** in the Web Configurator to check your port status.

ZYXEL
Your Networking Ally

# Warranty Card

Thank you for purchasing a Zyxel product. Zyxel has a reputation for delivering high quality, high performance products and services to our customers.
We recommend that you now visit the Zyxel website and register your product online. This will mean you can receive the latest firmware, drivers and product related information. If you still have further questions or enquiries related to the product, please contact our subsidiaries worldwide. Please note that warranty terms may vary by region. Full detailed information is available on our website, here: http://www.zyxel.com/support/warranty_information.shtml

## Purchase Information

Zyxel Product Name:

Hardware Serial Number:

Date of Purchase:

(In certain countries, the warranty will be validated with seller's signature and stamp):

## Support Information

**Bulgaria**
support@zyxel.bg

**Turkey**
+ 90 212 444 11 50
bilgi@Zyxel.com.tr

**Thailand**
+ 66 2831 5315
support@zyxel.co.th

**Taiwan**
+ 886 2 2739 9889
retail@zyxel.com.tw

**See the User's Guide at www.zyxel.com for more information, including customer support and safety warnings.**

**EU Importer**
Zyxel Communications A/S
Generatorvej 8D, 2860 Søborg, Denmark.
http://www.zyxel.dk

**US Importer**
Zyxel Communications, Inc
1130 North Miller Street Anaheim, CA 92806-2001
http://www.us.zyxel.com

Copyright © 2017 Zyxel Communications Corp. All Rights Reserved.