ERGO Electric Sit-Stand Desk Frame with Desktop, Grey/Black

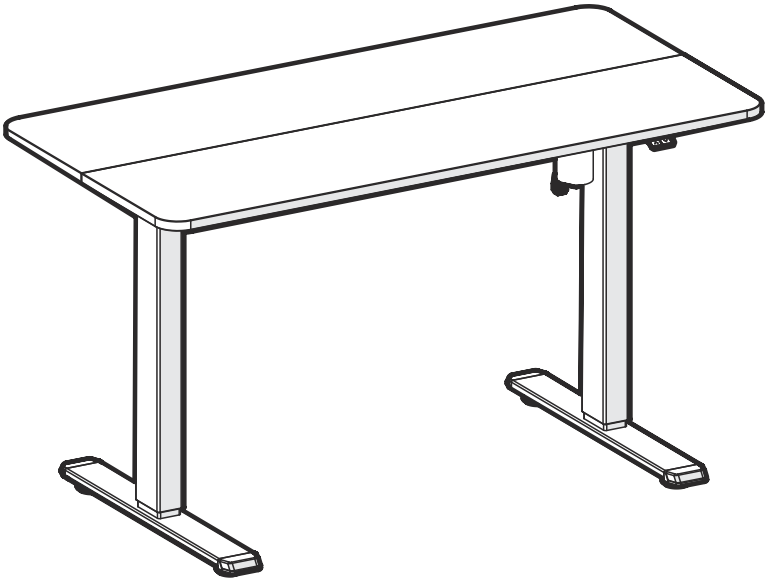

Digital Data Communications GmbH
Im Defdahl 10F
44141 Dortmund, Germany
Tel: +49 231 9075 222

650811(Grey)
650812(Black)

INSTALLATION MANUAL

Checklist and Installation

Please check all of the components shown in the component checklist. If any of the components are missing or damaged, contact your point of purchase for a replacement.

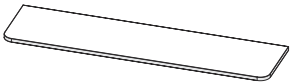

A (x2)
Desktop

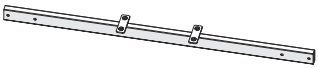

B (x1)
Crossbar

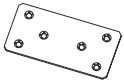

C (x3)
Connecting Plate

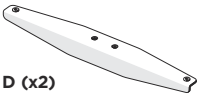

D (x2)
Side Bracket

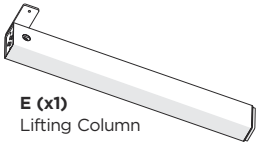

E (x1)
Lifting Column

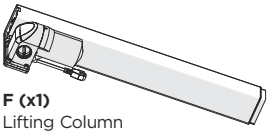

F (x1)
Lifting Column

G (x1)
Sync Rod

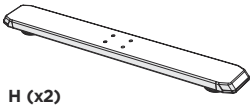

H (x2)
Foot

I (x1)
AC Adapter

J (x4)
Wooden Dowel Pins

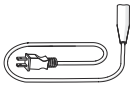

K (x1)
Power Cord

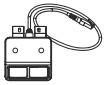

L (x1)
Controller
The picture of the controller is for your reference only. Actual product may vary.

S-A (x4)
M6x12
Hex Head Screw

S-B (x4)
M6x8
Hex Head Screw

S-C (x8)
M6x30
Hex Head Screw

S-D (x23)
ST4.2x13
Phillips Head Screw

S-E (x10)
ST4.8x16
Phillips Head Screw

S-F (x3)
Cable Clip

S-G (x1)
5mm
Allen Wrench

S-H (x1)
4mm
Allen Wrench

What important specifications should know before installation?

Weight Capacity
70kg (154lbs)

Power Input
(100~240V)

Operation Temperature
(-5°C~+40°C)

What tools are needed to assemble the desk frame?

Bubble Level

Allen Wrench
(Included)

Drill

Phillips Screwdriver

1. Attaching the Crossbar

- Attach the **Crossbar** B to the **Lifting Columns** F and E using **4 M6x8 Screws** S-B as shown in the illustration.

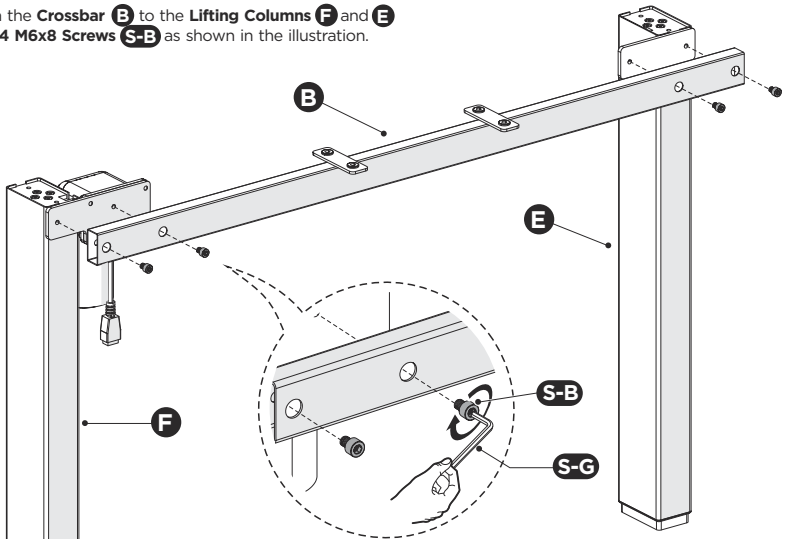

2. Attaching the Side Brackets

- Attach each **Side Bracket** D to the **Lifting Column** using **2 M6x12 Screws** S-A.
- Repeat the same process to attach the other side bracket.

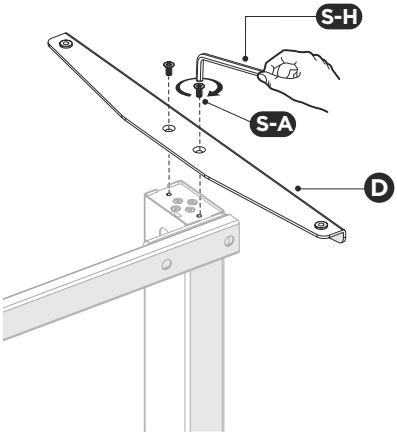

3. Attaching the Feet

- Turn over the desk frame with the help of another person.
- Place the **Lifting Column** E /F upside down on the floor.
- Attaching the **Foot** H to the **Lifting Column** using **4 M6x30 Screws** S-C .
- Repeat the same process to attach the other foot.

CAUTION: *At least two people are required when turning over the desk, or serious bodily injuries might occur.*

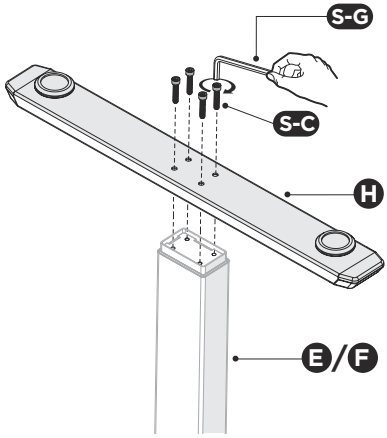

4. Assembling the Desktop

- Carefully place the dissassembled **Desktop** A upside down on the floor as shown.
- Assemble the desktop with **4 Wooden Dowel Pins** J and **3 Connecting Plates** C using **18 ST4.2x13 Screws** S-D .

Note: *Please make sure the desktop keep facing down while installation.*

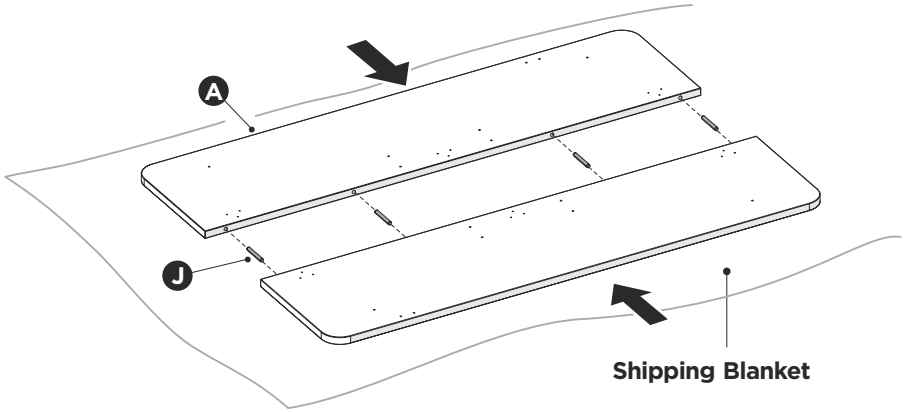

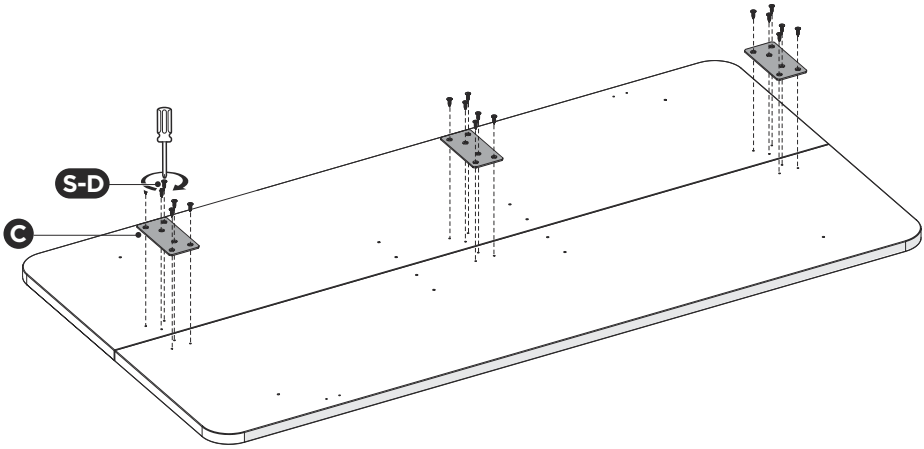

5. Attaching the Sync Rod

- Place the assembled desk frame to the backside of the desktop.
- Align the screw holes on the desktop with mounting holes found on the crossbar and side brackets.

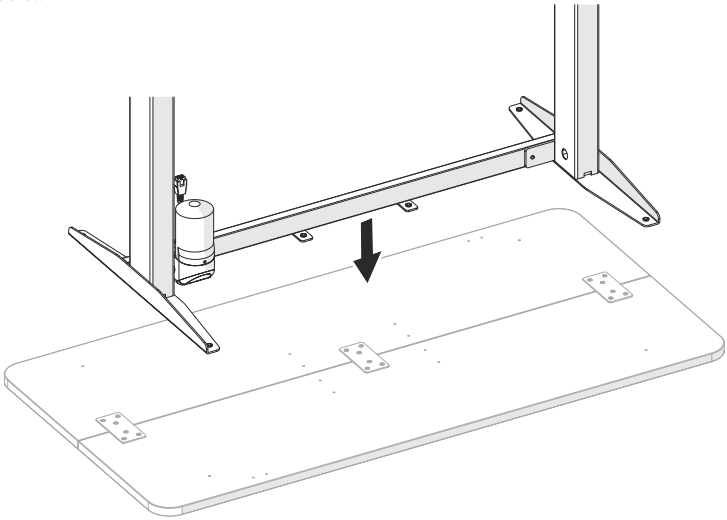

- Turn the knob as shown in the illustration to loosen and adjust the **Sync Rod** G .
- Insert both ends of Sync Rod into holes found on the desk frame as shown in the illustration.
- Re-tighten the knob.

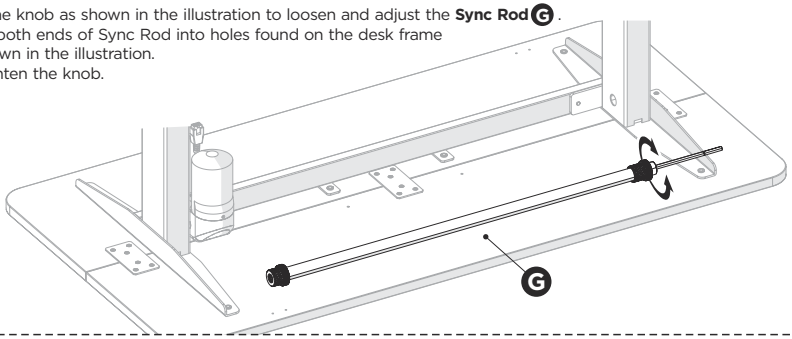

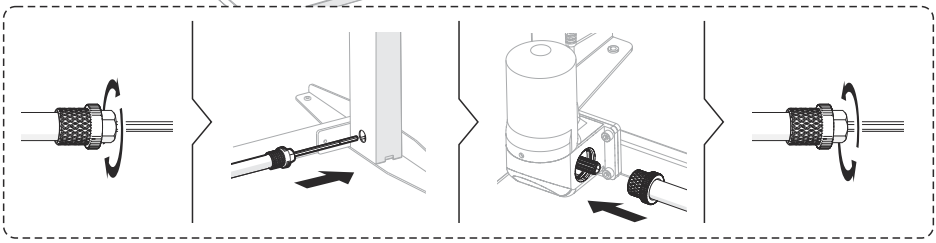

6. Attaching the Desk Frame to the Desktop

- Attaching the assembled desk frame to the desktop through the mounting holes found on the Side Brackets and Crossbar as shown in the illustration using **8 ST4.8x16 Screws S-E**.

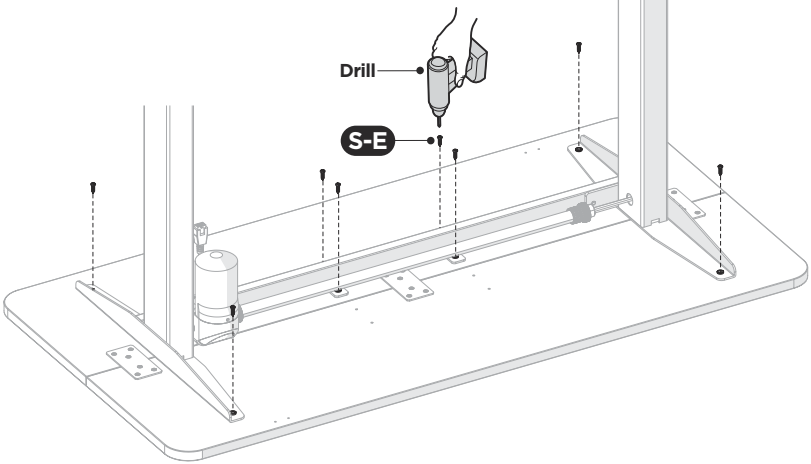

7. Attaching the AC Adapter

- Attach the **AC Adapter I** to the desktop using **2 ST4.8x16 Screws S-E**.
- Attach the **Controller L** to the desktop with **2 ST4.2x13 Screws S-D**.

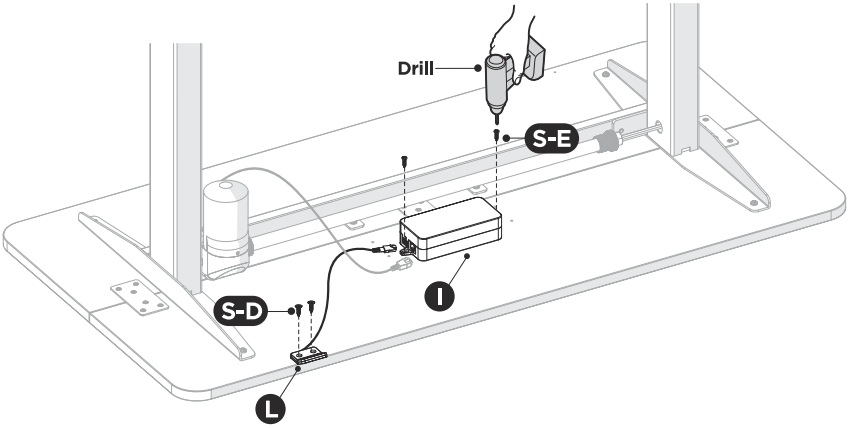

8. Inserting Cords into the AC Adapter

- Insert **Motor Cord** **F** into the port marked **M1** on the side of the **AC Adapter** **I**.
- Insert the **Controller** **L** into the port marked **HS**.
- Insert the **Power Cord** **K** into the port marked **AC**.

Note:
• Don't connect the plug to the socket before the desk is fully assembled.

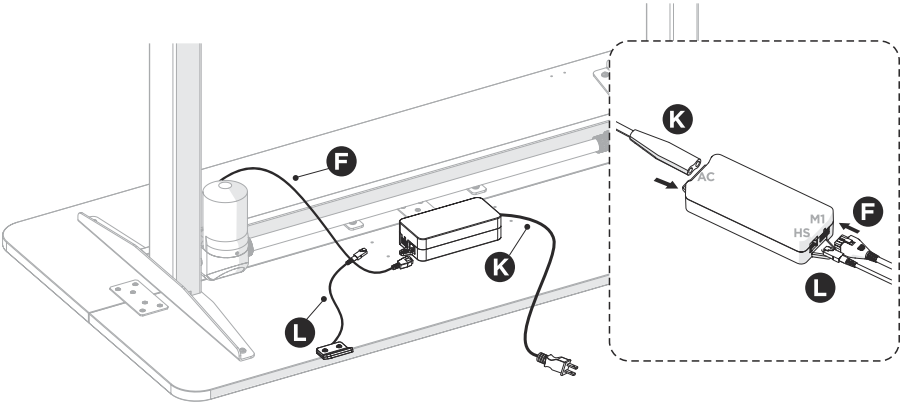

9. Cable Management

- Run the cables through the **Cable Clips** **S-F** and attach the cable clips to the desktop with **3 ST4.2x13 Screws** **S-D** to ensure clean and neat surface.

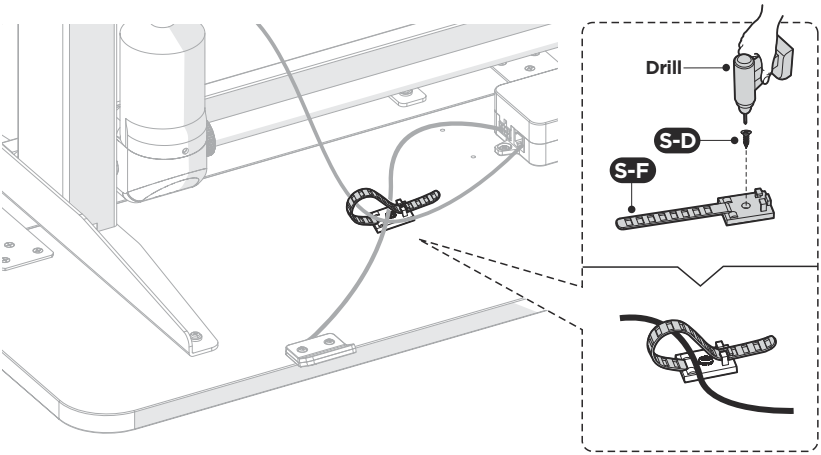

10. Adjusting the Desk

- Turn over the desk with the help of another person.
- There are two adjustable foot pads under each foot. If the floor isn't even, simply turn the pad to adjust the level to make the desk stable.
  Tip: *Use a bubble level (not included) to check if the desktop is even.*
- Connect the desk to power. Long press the up and down buttons to adjust the height.

CAUTION: *At least two people are required when turning over the desk, otherwise serious bodily injuries might occur.*

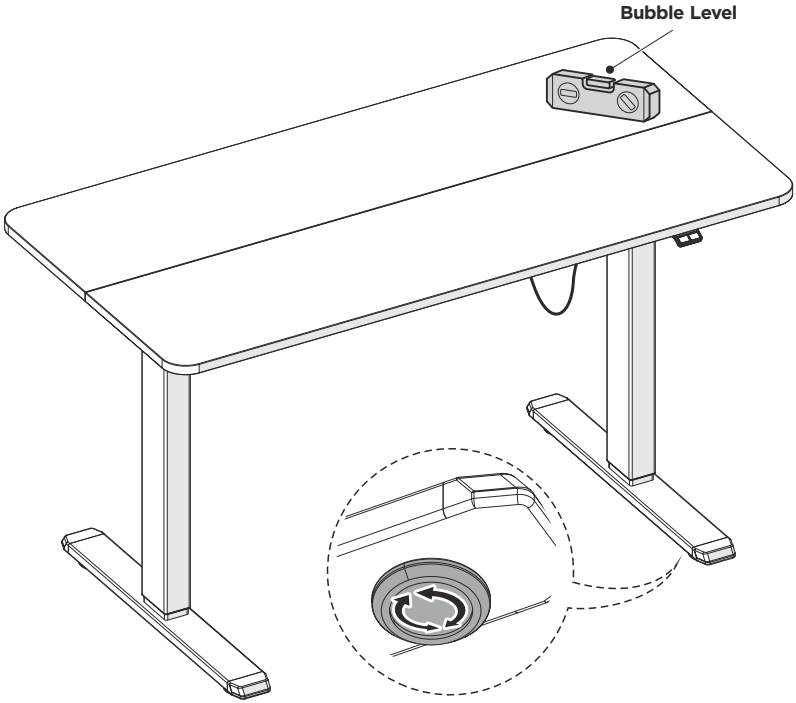

Instructions of Safety and Warnings:

- Any failure to comply with the safety and installation instructions in this manual may cause serious bodily injury.
- Overlooking any part of the instructions, warnings and additional information marked with the **"Note"** and **"⚠"** may result in serious damage to the system or its components.
- Children should never be allowed to operate or touch the product without direct supervision of an adult. Users should prevent children from being near or around the desk during operation.
- Disabilities and/or lack of experience and knowledge should be prevented from using the product unless under supervision or assisted during use and operation.
- Never sit on or exceed the rated weight of the desk.

CAUTION

Electrical Safety Instructions:

The product is powered by electricity. In order to avoid burns, fire and electric shock, please read the instructions carefully.

Don't clean the product with water while the power is still connected.

Don't disassemble or replace components while the power is still connected.

Never operate the system with a damaged cord or plug. Please contact your point of purchase to replace the damaged parts.

Never operate the system if it's in moist environment or its electrical components have contact with liquids.

Don't operate the system if the control box makes noise or odor.
Alterations of the given power unit and control box aren't allowed.

CAUTION

Other Safety Instructions:

- Remove any obstacles from the area around the desk during assembly and subsequent use.
- Organize all cords and wires to prevent any possible tripping or accidents from occurring.
- Never attempt to modify or change the desk frame or components that operate the desk.
- Don't add anything to the adjustable junctions of the desk frame.
- The desk is rated for Indoor Use Only.

Disposal: The product with this mark indicates that this product shouldn't be disposed with other household wastes throughout the EU. To prevent possible harm to the environment or human health from uncontrolled waste disposal, recycle it responsibly to promote the sustainable reuse of material resources. To return your used device, please use the local recycle service or contact your point of purchase to withdrawn the product.